TEXMATE Smart Process Measurement & Control

9/64 DIN 36x144mm (1.89”x3.78”) Case Dimensions and Panel Cutout

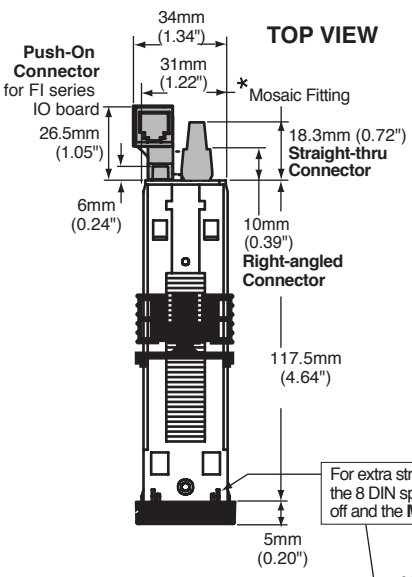

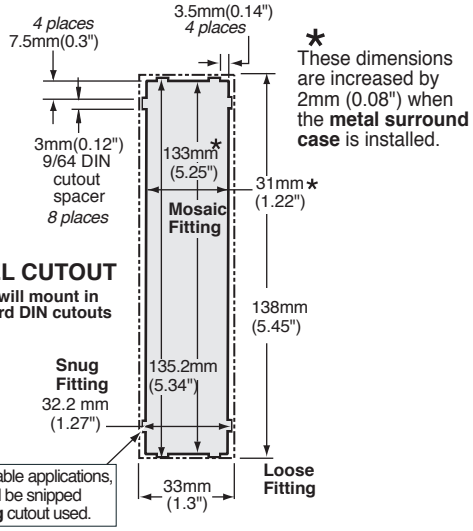

*These dimensions are increased by 2mm (0.08") when the **metal surround case** is installed.

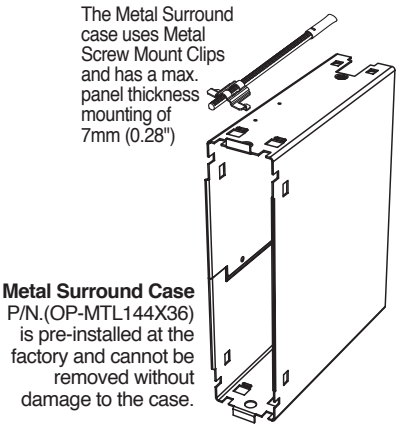

For extra strength in portable applications, the 8 DIN spacers should be snipped off and the **Mosaic fitting** cutout used.

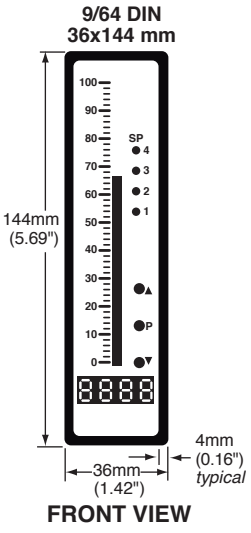

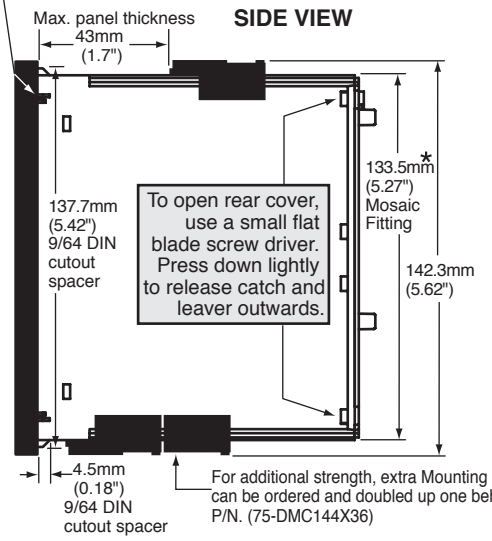

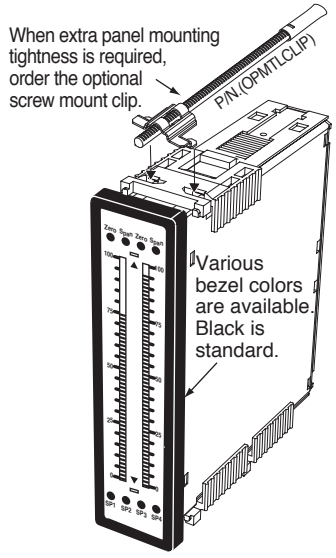

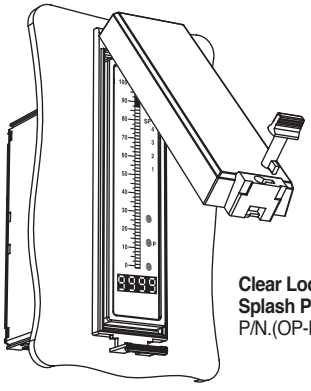

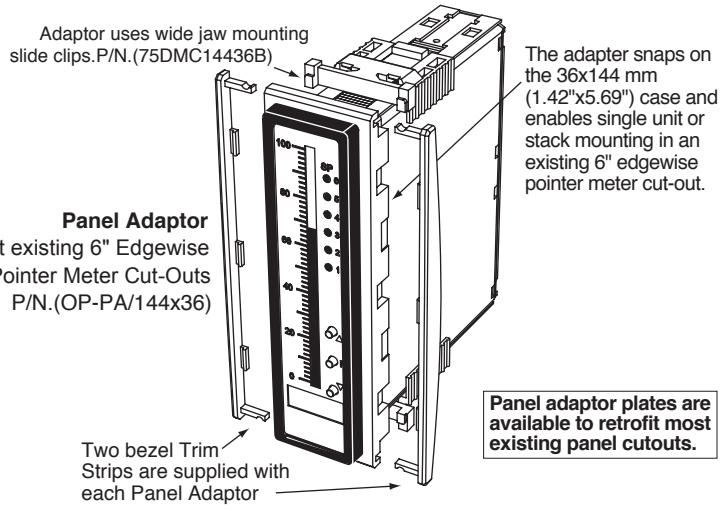

Panel adaptor plates are available to retrofit most existing panel cutouts.